CONNEDER Micro Cutting Tools | OEM / ODM Service
No.188, Niaosong 1st St., Yongkang Dist.,Tainan City 710, Taiwan (R.O.C.)
Tel:+002-886-6-2531237 Fax: +002-886-6-2116567 E-mail: service@connedertools.com

Threading Tool - Ordering Form

Attn to：_____ Date：_____

Tool Drawing

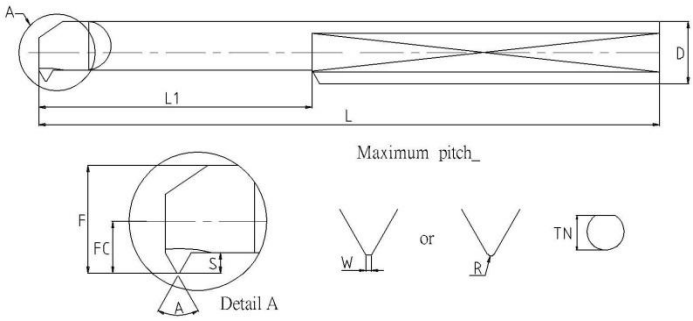

L=_____ L1=_____ F=_____ FC=_____ D=_____
A=_____ S=_____ R=_____ W=_____

Sketch Your Idea

Provide these tooling specifications

Shank dia(mm)

❑ø3 ❑ø4 ❑ø5 ❑ø6 ❑ø8

Orientation：

❑Right Hand ❑Lefe Hand

Coating options：

❑TiN ❑TiAlN ❑AiTiN ❑S-Fire ❑TiSiN ❑DLC

Qty required：_____

Tool required date: _____

Tool ref(if any) _____

WORK PIECE: pls sketch below or Fax the Dwg.

Material _____ HRC _____

Hole type ❑ Blind Hole ❑ Through Hole

What tools are used for pre-operation before to this tool? Eg: Pre Drill

Specify the size _____

Hole Size & Tol. _____

Cut Length _____

Straightness _____

Surface Finish _____

Inquiry From

Contact ：_____ Tel：_____

Name：_____ Fax：_____

Company Name：_____ H/P：_____

Address：_____ Email：_____